TCM

Heavy-Duty FORKLIFT TRUCKS

16-23 ton

FD160-2 FD180-2 FD200-2 FD230-2

Heavy-Duty FORKLIFT TRUCKS / 16-23 ton

TCM

■Dimensions

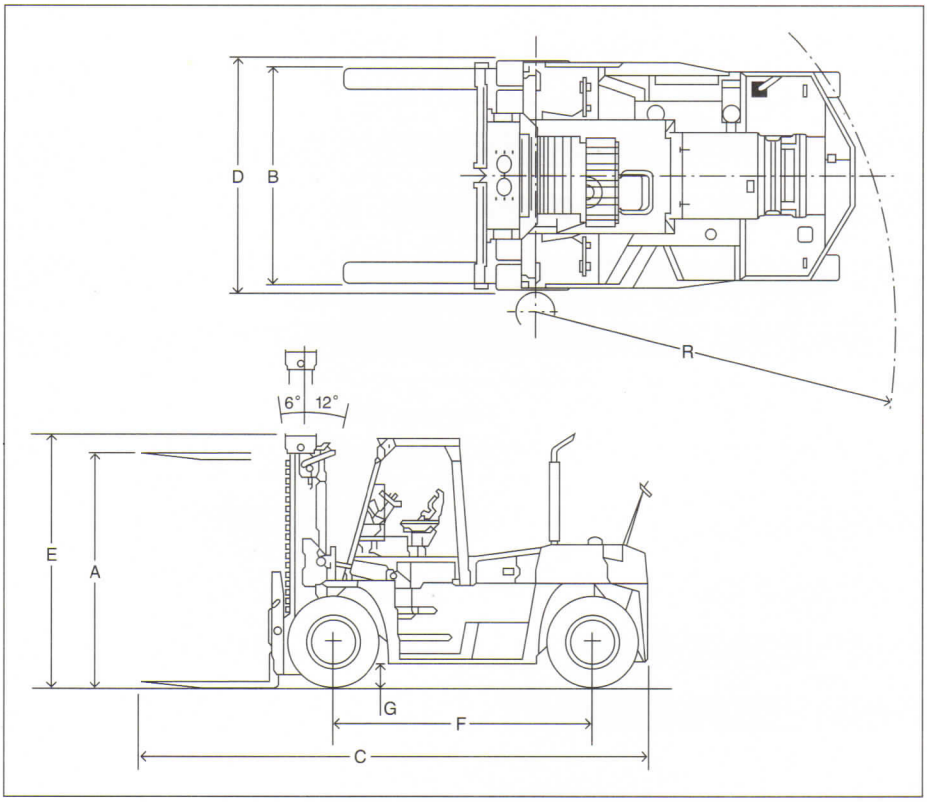

■Load Charts

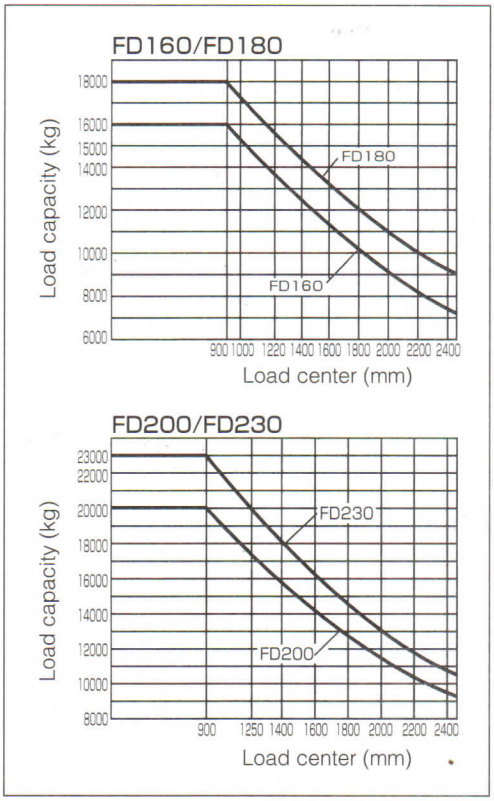

■Standard Specifications

Model					FD160-2	FD180-2	FD200-2	FD230-2	
Performance	Load capacity		kg (lbs)		16000 (35000)	18000 (40000)	20000 (44000)	23000 (50000)	20000 (44000)
	Load center		mm (in)		900 (36)	900 (36)	900 (36)	900 (36)	1250 (49)
	Maximum fork height		mm (in)	A	3000 (118.1)	3000 (118.1)	3000 (118.1)	3000 (118.1)	
	Lifting speed	: with load	mm/s (fpm)		330 (64.9)	290 (57.1)	285 (56.1)	240 (47.2)	
	Mast tilt angle	: forward / backward	deg		6 / 12	6 / 12	6 / 12	6 / 12	
	Max. Travel speed		km/h (mph)		34 (21.1)	34 (21.1)	34 (21.1)	32 (19.9)	
	Lateral fork adjustment (outside)		mm (in)	B	790 ~ 2750 (31.1~108.3)	810 ~ 2750 (31.9~108.3)	810 ~ 2750 (31.1~108.3)	950 ~ 2750 (37.4~108.3)	
	Turning radius (outside)		mm (in)	R	5000 (196.9)	5000 (196.9)	5150 (202.8)	5350 (210.6)	
	Gradeability	: with load (1.6km/h)	%		24	20	18	15	16
Dimensions & Weight	Overall length	: with fork	mm (in)	C	7165 (282.1)	7205 (283.7)	7205 (283.7)	7990 (314.6)	
		: without fork	mm (in)		5325 (209.6)	5365 (211.2)	5365 (211.2)	5545 (218.3)	
	Fork size	: L x W x T	mm (in)		1830 x 250 x 90 (72.0 x 9.8 x 3.5)	1830 x 260 x 100 (72.0 x 10.2 x 3.9)	1830 x 260 x 100 (72.0 x 10.2 x 3.9)	2440 x 310 x 98 (96.1 x 12.2 x 3.8)	
	Overall width		mm (in)	D	2970 (116.9)	2990 (117.7)	3060 (120.5)	3060 (120.5)	
	Overall height	: mast	mm (in)	E	3290 (129.5)	3540 (139.4)	3570 (140.6)	3580 (140.9)	
		: overhead guard	mm (in)		3200 (126.0)	3230 (127.2)	3260 (128.3)	3260 (128.3)	
	Wheelbase		mm (in)	F	3650 (143.7)	3650 (143.7)	3650 (143.7)	3650 (143.7)	
	Ground clearance		mm (in)	G	295 (11.6)	270 (10.6)	300 (11.8)	290 (11.4)	
	Total weight		kg (lbs)		22510 (49600)	25040 (55200)	27260 (60100)	30760 (67800)	
Engine & Transmission	Internal combustion engine	: model			ISUZU 6BG1T Diesel Engine				
		: piston displacement	lit. (in^3)		6.494 (396.3)				
		: rated output / r.p.m.			125kW (170PS) / 2200r.p.m. (SAE GROSS 127kW (172HP) / 2200r.p.m.)				
		: maximum torque / r.p.m.			620N·m (63kgf·m) / 1800r.p.m.				
	Transmission	: type			Automatic power-shift transmission				
		: number of speed			3 - 3 (Fwd / Rvs)				
Tire & Brake	Tire size				12.00-24-18PR	13.00-24-20PR	14.00-24-24PR	14.00-24-24PR	
	Brake	: service			Air-over-hydraulic disc brake				
		: parking			Built in transmission, wet multiple disc brake				
	Steering system				Full hydrostatic power steering				

■Wide View Mast

Mast Model	Capacity										Max. Fork Height		Overall Mast Height (lowered)							
	Load center 900mm(36in)								1250mm(49in)											
	FD160-2		FD180-2		FD200-2		FD230-2		FD230-2				FD160-2		FD180-2		FD200-2		FD230-2	
	kg	lbs	kg	lbs	kg	lbs	kg	lbs	kg	lbs	mm	in	mm	in	mm	in	mm	in	mm	in
VM300	16000	35000	18000	40000	20000	44000	23000	50000	20000	44000	3000	118.1	3290	129.5	3540	139.4	3570	140.6	3580	140.9
VM350	16000	35000	18000	40000	20000	44000	23000	50000	20000	44000	3500	137.8	3540	139.4	3790	149.2	3820	150.4	3830	150.8
VM400	16000	35000	18000	40000	20000	44000	23000	50000	20000	44000	4000	157.5	3790	149.2	4040	159.1	4070	160.2	4080	160.6
VM450	16000	35000	18000	40000	20000	44000	23000	50000	20000	44000	4500	177.2	4040	159.1	4290	168.9	4320	170.1	4330	170.5
VM500	16000	35000	18000	40000	20000	44000	23000	50000	20000	44000	5000	196.9	4290	168.9	4540	178.7	4570	179.9	4580	180.3
VM550	15000	33000	16000	35000	18000	40000	21500	47000	19000	42000	5500	216.5	4540	178.7	4790	188.6	4820	189.8	4830	190.2
VM600	14000	31000	15000	33000	16000	35000	20000	44000	18000	40000	6000	236.2	4790	188.6	5040	198.4	5070	199.6	5080	200.0

Mast Model	Overall Mast Height (raised)								Tilt Angle	Service Weight							
	FD160-2		FD180-2		FD200-2		FD230-2		Fwd / Bwd	FD160-2		FD180-2		FD200-2		FD230-2	
	mm	in	mm	in	mm	in	mm	in	degree	kg	lbs	kg	lbs	kg	lbs	kg	lbs
VM300	4790	188.6	5040	198.4	5070	199.6	5080	200.0	6 / 12	22510	49600	25040	55200	27260	60100	30760	67800
VM350	5290	208.3	5540	218.1	5570	219.3	5580	219.7	6 / 12	22680	50000	25210	55600	27430	60500	30990	68300
VM400	5790	228.0	6040	237.8	6070	239.0	6080	239.4	6 / 12	22850	50400	25400	56000	27620	60900	31230	68800
VM450	6290	247.6	6540	257.5	6570	258.7	6580	259.1	6 / 12	23190	51100	25740	56700	27960	61600	31760	70000
VM500	6790	267.3	7040	277.2	7070	278.3	7080	278.7	6 / 12	23360	51500	25920	57100	28140	62000	32000	70500
VM550	7290	287.0	7540	296.9	7570	298.0	7580	298.4	6 / 12	23530	51900	26100	57500	28320	62400	32250	71100
VM600	7790	306.7	8040	316.5	8070	317.7	8080	318.1	6 / 12	23700	52200	26270	57900	28490	62800	32480	71600

■STANDARD EQUIPMENT AND ACCESSORIES

[Equipment]

- Adjustable suspension seat with seat belt
- Air-dryer for brake line
- Cartridge type air, fuel, engine oil, converter oil and hydraulic filters
- Coolant recovery system
- Cyclopack type double element air cleaner
- Cylinder type bonnet latch
- Drawbar pin
- Durable overhead guard
- Electrically-controlled parking brake
- Engine after glow system
- Engine auto glow system
- Engine oil dipstick
- Fork positioner (manual type)
- Front dual drive wheels
- Full hydrostatic power steering
- Hydraulic oil gauge (view level)
- ISUZU diesel engine with turbo-charger
- Lift circuit cut-off valve
- Load check valve
- Overhead exhaust system
- Pneumatic tires
- Power brake booster
- TCM automatic 3-speed powershift transmission
- Tilt adjustable steering post
- Tilt lock valve
- Torque converter oil dipstick
- Wide view mast
- 1830mm forks (FD160/FD180/FD200)
- 2440mm forks (FD230)

[Accessories]

- Back-up buzzer
- Electric horn
- Head lights
- Operator tool kit
- Rear combination lights (turn signal, tail, stop, back-up and side lights)
- Rear reflectors
- Rear under-view mirror
- Rear view mirrors
- Seat adjust lever
- Turn signal lights (front)

[Switch & Controls]

- Automatic transmission mode select switch (power mode / economy mode)
- Electrically-controlled direction change lever (inc. Neutral safety lock device)
- Electrically-controlled parking bkake switch
- Lift lever
- Light switch
- Preheater switch (inc. starter, main switch)
- Speed change hold switch (1st fixed / 2nd fixed / Automatic speed shift)
- Tilt lever
- Turn signal lever

[Instruments]

- Air cleaner clogging warning indicator
- Brake air pressure meter
- Brake air pressure warning indicator
- Brake oil level warning indicator
- Charge indicator
- Converter oil level warning indicator
- Converter oil temperature warning indicator
- Engine oil pressure warning indicator (inc. engine oil filter clogging warning)
- Engine water temperature meter
- Fuel meter
- Hourmeter
- Parking brake indicator
- Speedometer
- Turn signal indicator

■OPTIONAL EQUIPMENT AND ACCESSORIES

[Equipment]

- Fork positioner (hydraulic motor type)
- CFC free air-conditioner
- Exhaust purifying muffler
- Heater & defroster
- High mast
- Long forks
- Side shifting device
- Steel cabin

[Accessories]

- Central greasing system (manual pump type)
- Fire extinguisher
- Rotating worning light
- Working light (front, rear)

* TCM products and specifications are subject to change without notice.